VICTORY INFRARED

Your Partner in IR and UV Technology

HLW Infrared Heaters

VICTORY INFRARED

HLW Infrared Heaters

HLW Infrared heaters provide a safe and efficient heat source for a wide variety of applications. Available with an IP55 rating, these are ideal for any outdoor situations. With a range of styles, colours, lamp options and wattages available, there is an HLW model to suit every application. With a long lamp life, low running costs and minimal energy wastage, they offer one of the most cost effective heating solutions on the market.

HLW heaters combine robust construction with excellent design, making them ideal for both commercial and domestic use.

Fast, Efficient Heating

- Suitable for wall, ceiling and parasol mounting
- 1, 1.5 , 2, 3 or 4.5kW
- Easy to maintain and clean
- Silent
- Models for USA and Canadian markets available
- IP55 rating
- Long lamp life — minimum 7000 hours
- Large area coverage
- Choice of colours
- Standard NDA, Gold, or Low Glare Gold lamp
- Mounting and control accessories

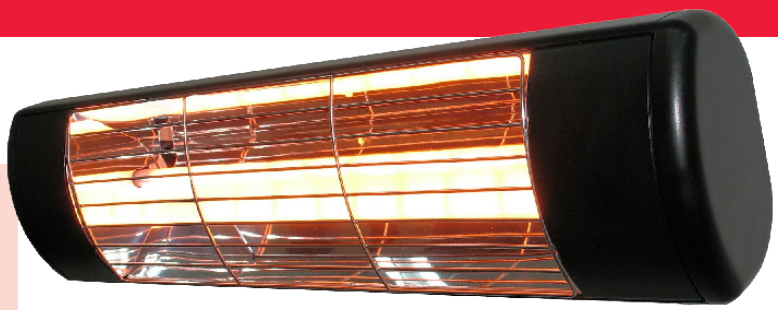

HLW10,15,20

HLW30

HLW45

Applications

- Churches
- Factories
- Garages
- Offices
- Shops
- Warehouses
- Pubs
- Restaurants
- Patios

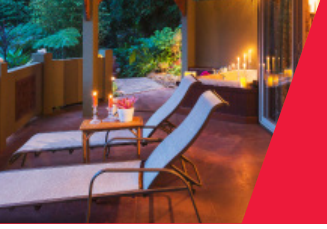

Technical Data
HLW Infrared Heaters

HLW Range

Voltage: 220-240V

	Code	Colour	Watts	Lamp	Lamp life (h)	Weight (kg)
	IP55					
1	HLW10	White	1000	NDA	7000	1.7
1	HLW15	White	1500	NDA	7000	1.7
1	HLW15B	Black	1500	NDA	7000	1.7
1	HLW15S	Silver	1500	NDA	7000	1.7
1	HLW15BG	Black	1500	Gold	7000	1.7
1	HLW15G	White	1500	Gold	7000	1.7
1	HLW20BG	Black	2000	Gold	7000	1.7
2	HLW30BG	Black	3000	Gold	5000	3.2
3	HLW45BG	Black	4500	Gold	5000	4.5

	Code	Colour	Watts	Lamp	Lamp life (h)	Weight (kg)
	IP66					
1	HLW15IP66	White	1500	NDA	7000	1.7
1	HLW15BIP66	Black	1500	NDA	7000	1.7
1	HLW15SIP66	Silver	1500	NDA	7000	1.7
1	HLW15BGIP66	Black	1500	Gold	7000	1.7
1	HLW20BGIP66	Black	2000	Gold	7000	1.7

Supplied with
- 3m mains cable
- Wall bracket
- Parasol clamp

Optional
- Low glare option
- Folding parasol arm

Dimensions

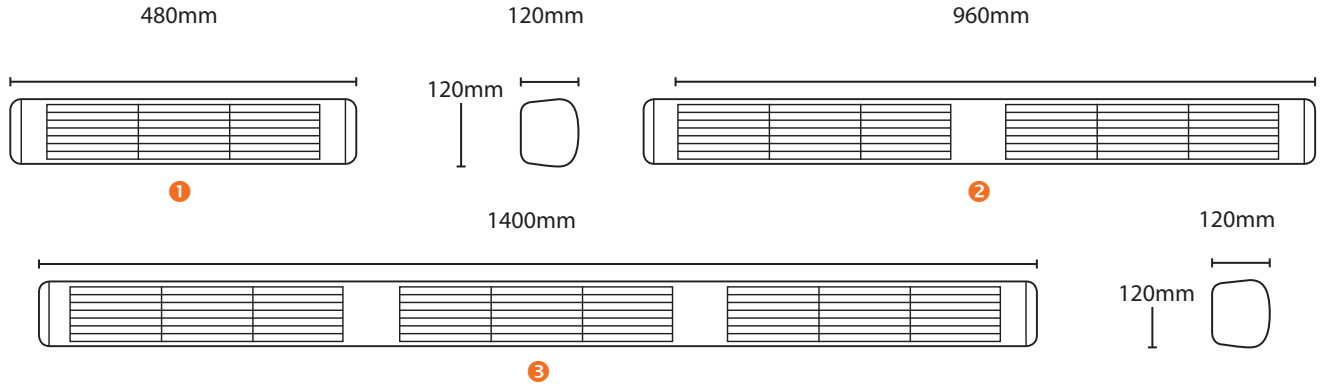

Area coverage

H (m)	X (m)			Y (m)			Z (m)			Area (m^2)		
	1	2	3	1	2	3	1	2	3	1	2	3
Wall mounted												
2.0	2.3	3.4	4.3	2.4	2.4	2.4	4.0	4.5	5.0	7.6	9.48	11.16
2.5	3.0	4.2	4.8	3.0	3.0	3.0	5.2	5.8	6.4	12.3	15.0	16.8
Overhead mounted												
2.0	3.6	4.3	4.8	2.5	2.5	2.5	–	–	–	9.0	10.7	12.0
2.5	4.8	5.2	5.6	3.5	3.5	3.5	–	–	–	16.8	18.2	19.6

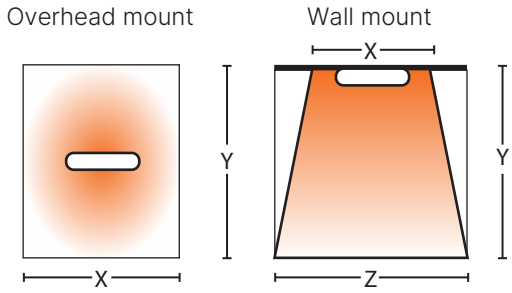

H = mounting height

© Victory Lighting (UK) Ltd 2025
The information contained in this literature is for general information purposes only. Victory Lighting (UK) Ltd endeavours to keep the information up to date and correct, but makes no representations or warranties of any kind, express or implied, about the completeness, accuracy, reliability, suitability or availability with respect to the information, products, services, or related graphics contained in this literature.

Victory Lighting (UK) Ltd accepts no liability for any loss or damage including without limitation, indirect or consequential loss or damage, or any loss or damage whatsoever arising from loss of data or profits arising out of, or in connection with, the use of this literature.

VICTORY
Victory Lighting (UK) Ltd
Unit 10, Chartmoor Road, Leighton Buzzard, LU7 4WG

Contact us today

And learn more about our Infrared technology solutions

+44 (0) 1525 487960
sales@victorylighting.co.uk
victorylighting.co.uk

VICTORY
INFRARED